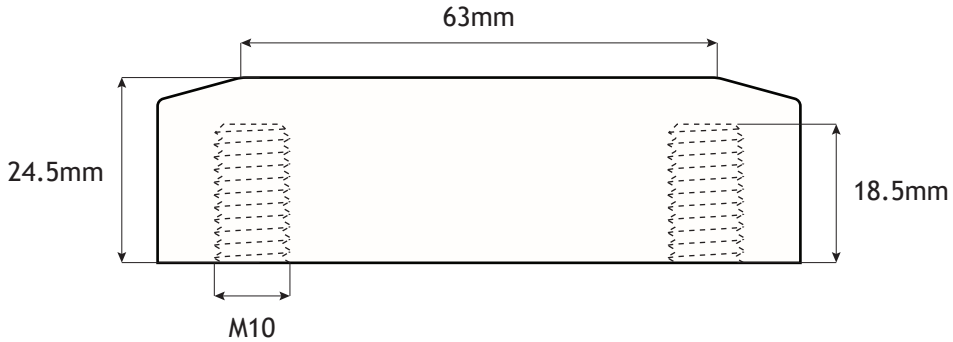

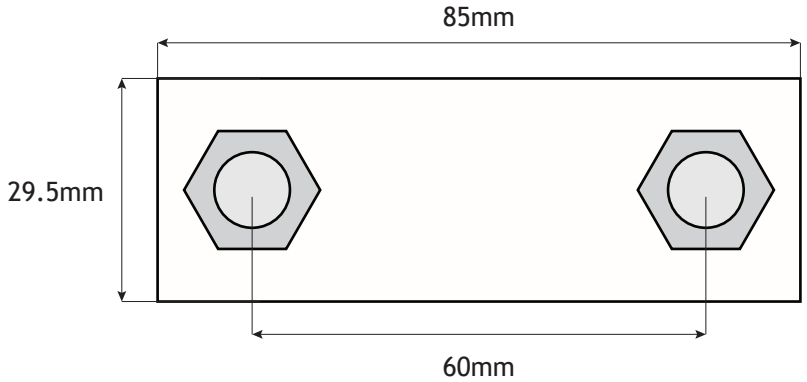

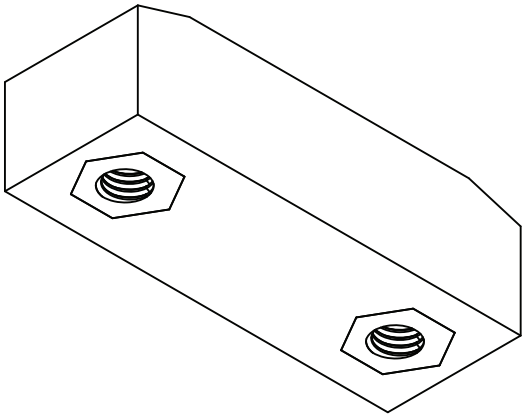

Komepa Guide Shoe			Part Number **11802**
Date: 13th Febraury 2024	*Created by:* M. Watkins		reeley
Scale: 1:1	*Page Size:* A4	*Batch Code:* 27797	